This drawing is the property of Technical Signs and must not be reproduced in part or in full without prior consent of Technical Signs.

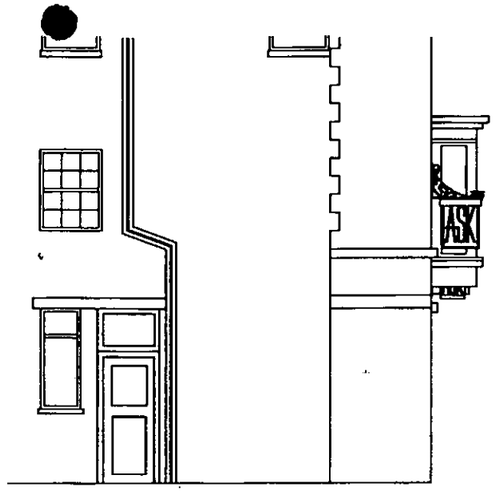

Side (East) Elevation
Scale 1:100

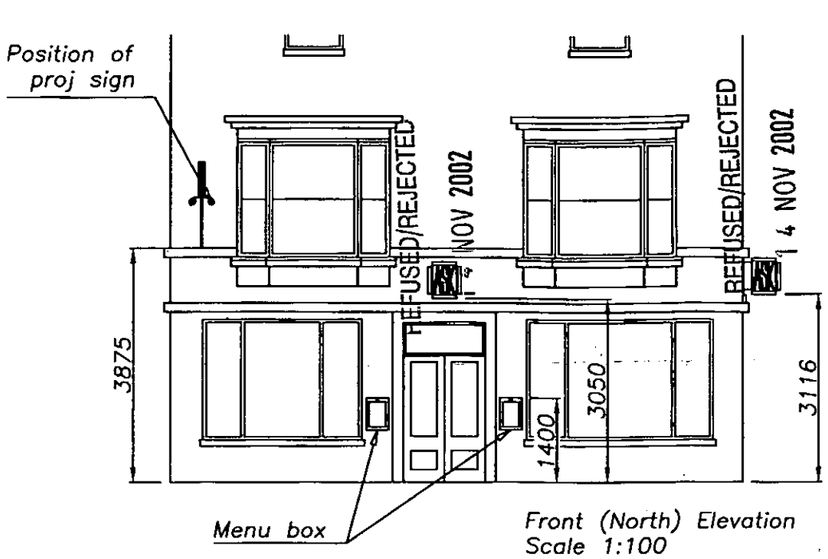

Front (North) Elevation
Scale 1:100

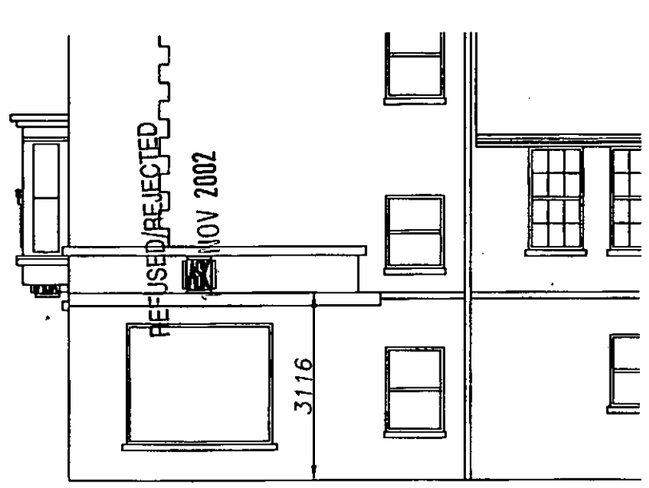

Side (West) Elevation
Scale 1:100

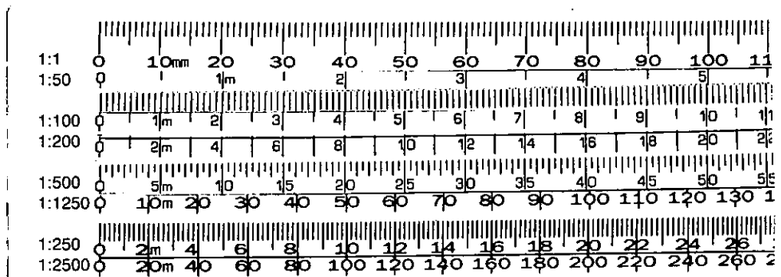

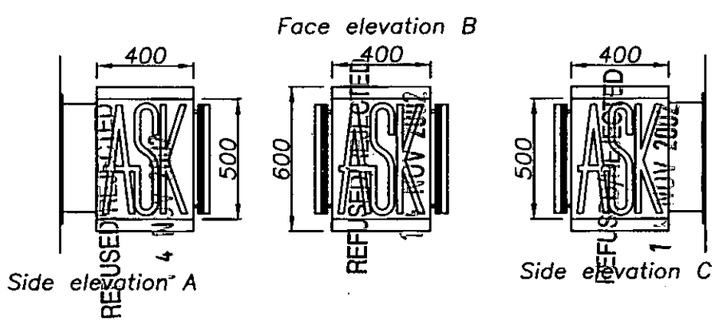

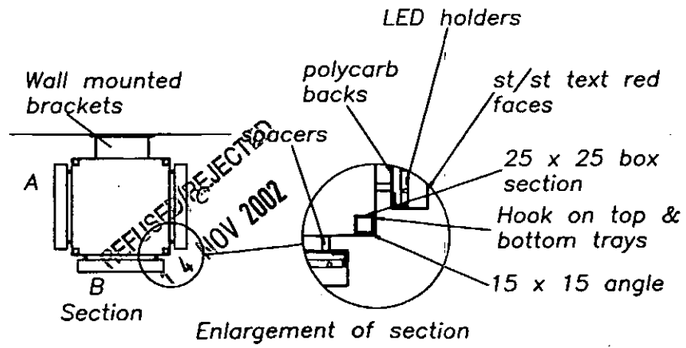

SPECIFICATION
Frame built from 25x25 stainless steel box section. Face panels to be satin st/st. Panels to be kept in place by a 15 x 15 st/st angle and this to be overlapped by a folded st/st tray with 50mm returns.
Text to be built up st/st letters polished returns red painted faces, fitted with clear polycarbonate backs, internally illuminated via Red LED lights for halo illumination only.
Wall mounted brackets to be welded to 3mm thk back panel. Panels to be fixed to internal frame.

FAREHAM BOROUGH COUNCIL
PLANNING & DEVELOPMENT
19 SEP 2002
P/02/1269/AD
IN PART
APPROVED/PERMISSION
14 NOV 2002

Rev	Modification	Date
A	cube spec changed to st/st	17.9.02

Technical Signs
Floor 1 – Unit 3
Hille Business Centre
132 St Albans Road
Watford, Herts, WD2 4AE
Tel: 01923 811999
Fax: 01923 811998
E-mail: info@technicalsigns.co.uk

Client ASK RESTAURANT

Address/Job details
10 WEST ST, FAREHAM, HAMPSHIRE

Job No EN0517

Checked	Approved
Drawn by JC	Date 12.9.02
Scale 1:100 (A3)	Drawing No EN0517 1of2
Rev A	