10cm - Caution as distortion can occur.

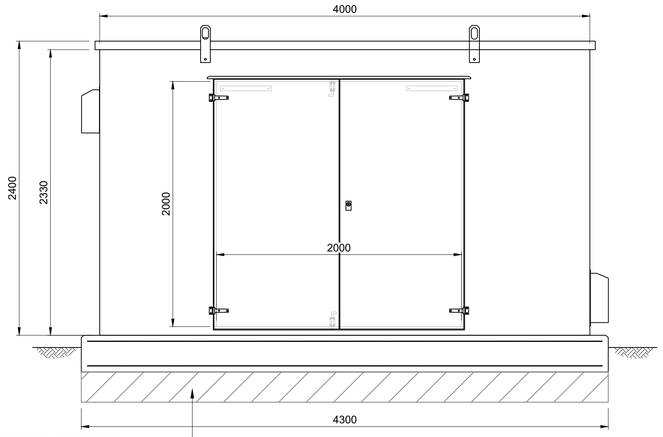

RC25/30 CONCRETE SLAB 300mm THICK WITH 2 No LAYERS OF A393 MESH (1 TOP & 1 BOTTOM), MINIMUM COVER 50mm. EDGE OF SLAB TO HAVE 20mm CHAMFERS. SLAB TO EXTEND A MINIMUM 150mm FROM EDGE OF KIOSK. SUB-BASE TO BE TYPE 1 AND BE A MINIMUM OF 250mm THICK

FRONT ELEVATION

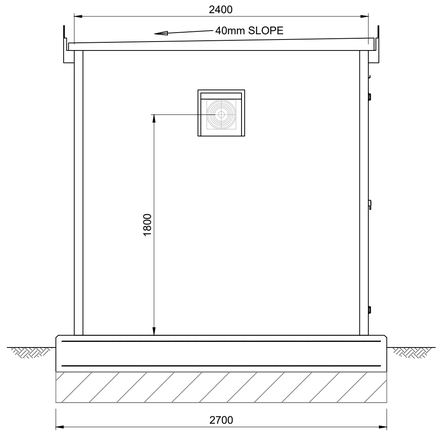

LEFT HAND SIDE ELEVATION

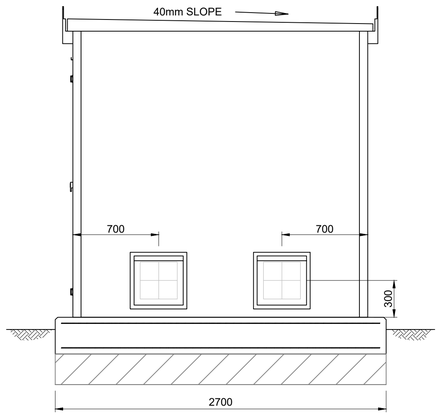

RIGHT HAND SIDE ELEVATION

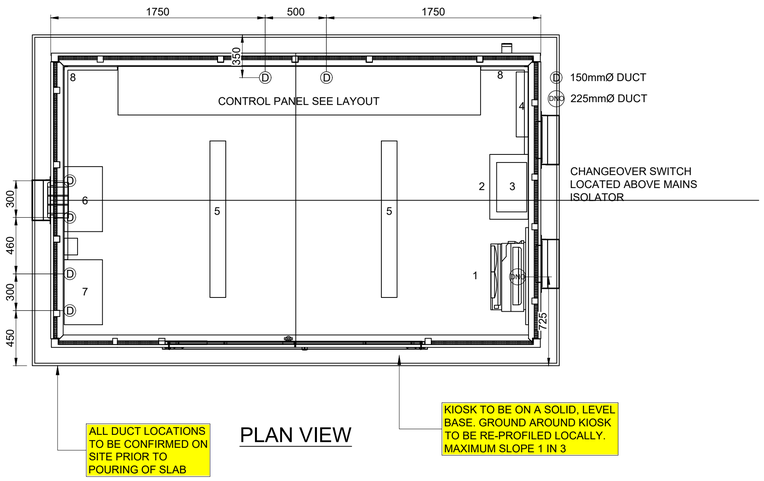

ALL DUCT LOCATIONS TO BE CONFIRMED ON SITE PRIOR TO POURING OF SLAB

PLAN VIEW

KIOSK TO BE ON A SOLID, LEVEL BASE. GROUND AROUND KIOSK TO BE RE-PROFILED LOCALLY. MAXIMUM SLOPE 1 IN 3

CONTROL PANEL LAYOUT

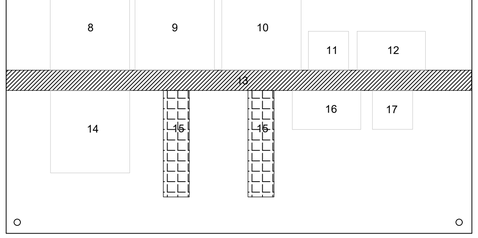

1	DNO ELECTICAL INTAKE
2	GENERATOR CHANGEOVER SWITCH
3	MAINS ISOLATOR
4	HEATER
5	LED STRIP LIGHTS
6	EDM MONITOR
7	OUTSTATION
7	METAL TRUNKING

8	PUMP1 STARTER DOL (0.65m X 0.65m)
9	PUMP2 STARTER DOL (0.65m X 0.65m)
10	THREE PHASE PROCESS DISTRIBUTION BOARD
11	230v - 110v TRANSFORMER
12	INSTRUMENT DISTRIBUTION BOARD
13	METAL TRUNKING
14	PUMP STARTERS ICA SECTION (0.65m X 0.65m)
15	CABLE TRAY
16	BUILDING SERVICES DISTRIBUTION BOARD
17	FLOW METER DISPLAY

SCALE BAR 1:250

2.5m	5m	7.5m	10m	12.5m	15m	17.5m	20m	22.5m	25m

Burroughs

1. THIS DRAWING IS TO BE READ IN CONJUNCTION WITH ALL RELEVANT ARCHITECTS AND ENGINEERS DRAWINGS AND SPECIFICATIONS.
2. DO NOT SCALE FROM THIS DRAWING. ANY AMBIGUITIES, OMISSIONS AND ERRORS ON DRAWINGS SHALL BE BROUGHT TO THE ENGINEER'S ATTENTION IMMEDIATELY. ALL DIMENSIONS MUST BE CHECKED AND VERIFIED ON SITE.
3. ALL DIMENSIONS ARE IN METERS UNLESS OTHERWISE NOTED.
4. FOR GENERAL NOTES, REFER TO DRAWING:

Project:

SWORDFISH DEVELOPMENT, SOLENT AIRPORT

REV.	DESCRIPTION	DATE	DRW.	CHK.
S2-P1.0	ORIGINAL ISSUE	11/09/26	JF	SB

Drawing Title: SERIES 100 - PRELIMINARY TYPICAL FOUL PUMPING STATION KIOSK DETAIL

Burroughs Project No.:	Scale:	Original Paper Size:
51139	1:250	A1

Drawing Number:

51139-BUR-XX-XX-D-C-10105

Status: S2 – Status Description: FOR INFORMATION

This document is copyright of Burroughs Ltd. Use figured measurements only! DO NOT SCALE FROM DRAWING. Verify all dimensions prior to construction. Immediately report any discrepancies to Burroughs and if in doubt ASK. This drawing should be read inconjunction with all other associated project information

10 cm - Caution as distortion can occur.
ALL DIMENSIONS ARE IN MILLIMETRES - ALL STRUCTURAL DIMENSIONS ARE IN METRES - ALL LEVELS ARE IN METRES.
N:\51139-00 SWORDFISH DEVELOPMENT. SOLENT AIRPORT\01 PRODUCTION FORM\01 DRAWINGS\02 CIVILS\51139-BUR-XX-XX-D-C-10105_TYPICALFOULPUMPINGSTATIONKIOSKDETAIL.DWG