This drawing is the property of Technical Signs and must not be reproduced in part or in full without prior consent of Technical Signs.

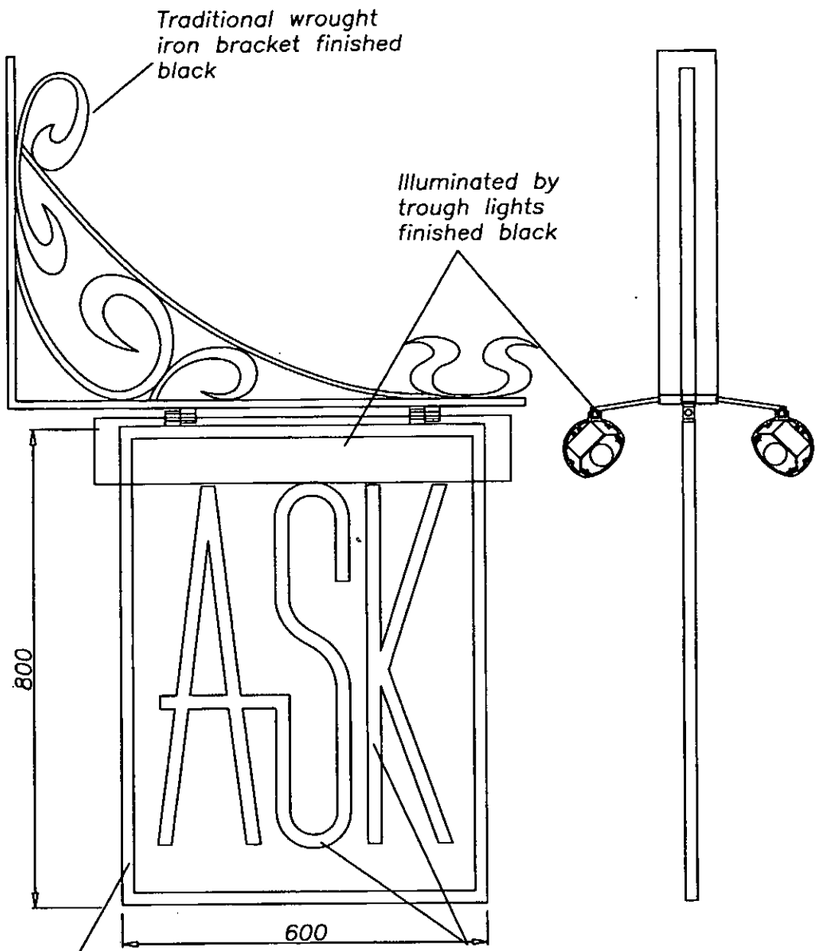

20x20 ali channel frame fitted with ali panel, all finished black.

3mm ali text finished red applied to panel.

TRADITIONAL PROJECTION SIGN – Scale 1:10

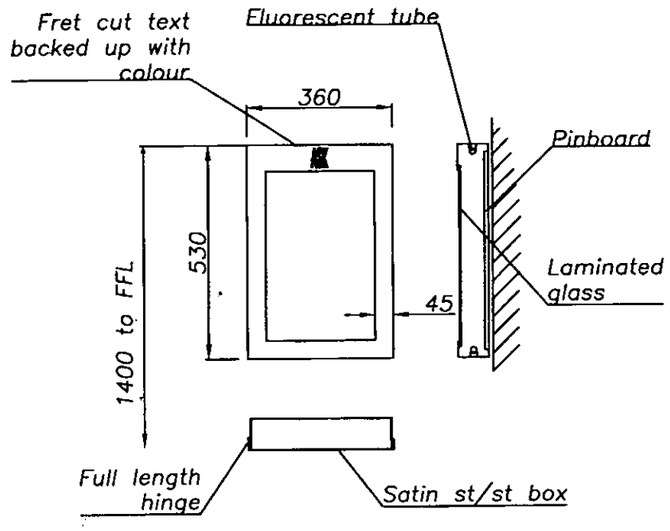

Menus mounted onto wall

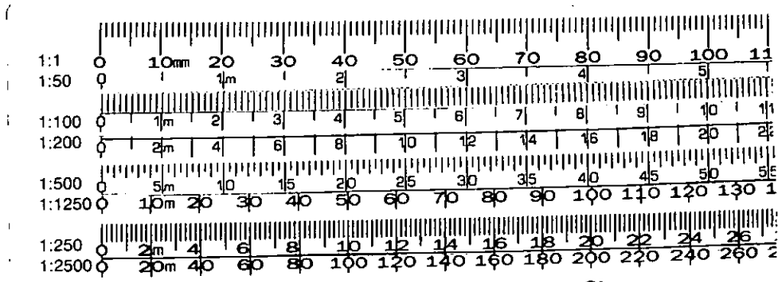

File Ref

Size:

FAREHAM BOROUGH COUNCIL
PLANNING & DEVELOPMENT
19 SEP 2002
P/02/1269/AD
APPROVED/PERMISSION
14 NOV 2002

A Menu changed from brass to st/st 17.9.02

Rev	Modification	Date

Technical Signs
Floor 1 – Unit 3
Hille Business Centre
132 St Albans Road
Watford, Herts, WD2 4AE.
Tel: 01923 811999
Fax: 01923 811998
E-mail: info@technicalsigns.co.uk

Client ASK RESTAURANT

Address/Job details
10 WEST ST, FAREHAM, HAMPSHIRE

Job No EN0517

Checked	Approved
Drawn by JC	Date 12.9.02
Scale 1:10 (A3)	Drawing No EN0517 2of2

Rev A